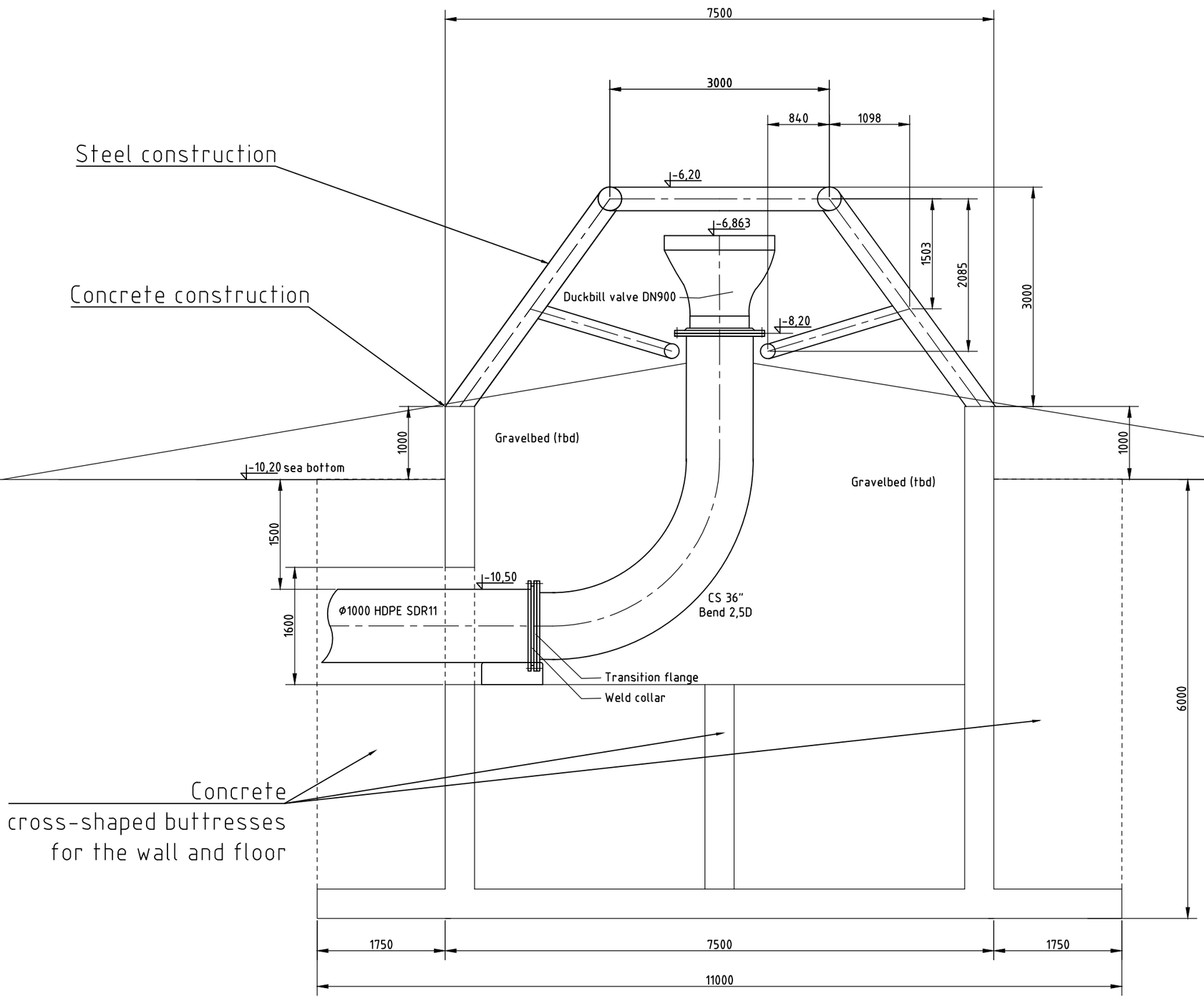

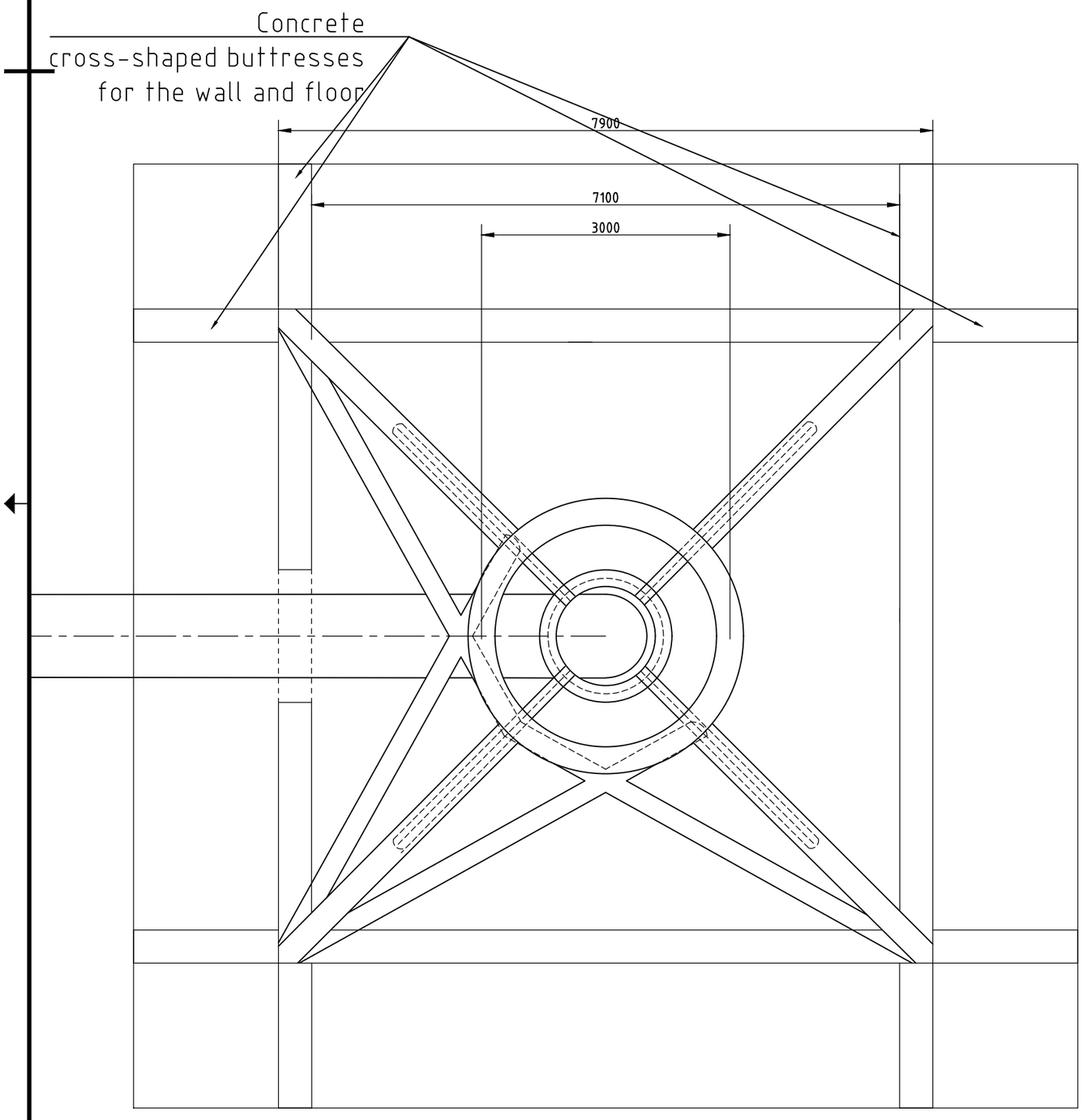

Top View

Note:
Preliminary design.
Main dimensions to be verified when results soil investigation will become available
Detail dimensions to be determined.

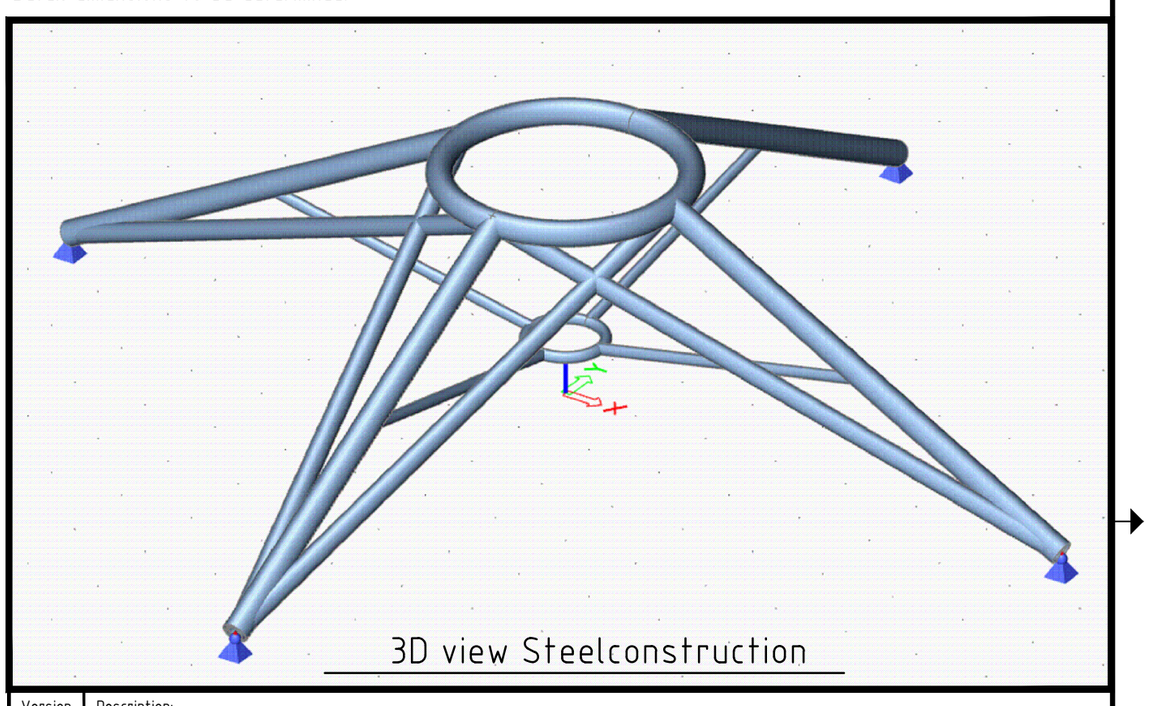

3D view Steelconstruction

Version	Description:			
	Datum:	Drawn:	Checked:	Released:
Version 1.0	Description: Updated on comments			
	Datum: 11-11-2021	Drawn:	Checked:	Released:

Client

Contact

PALLAS

Engineering company

ARCADIS Design & Consultancy for natural and built assets

Project

Contact

Canal Water Supply and Removal (CWSR)

Projectnumber : XC05011000642
Phase : Basic Design

Security Category: AS1

Subject : Outfall at sea
Canal water supply and Removal

Scale : 1:60
Contractnumber : 20150612-001 | CA91

Pageformat : A1
Pagenumber : 1 of 1

Status : Preliminary design

Drawingnumber :
PAL_CWSR-ARC-OUT-XX-DRW-ME-BD-8025

Version: 1.0

DocId: : 1.0